AXI DMA Back-End Core

Product Highlights

- Provides high performance, scatter-gather DMA operation
- Works with Northwest Logic Expresso Cores and FPGA PCI Express hard cores
- Can be configured with multiple independent DMA Engines
- Supports Packet/Block and Addressed/Non-addressed transfers
- AXI3/4 and AXI4-Stream interfaces
- Supports 32 and 64 bit system addressing
- Supports legacy, MSI, MSI-X interrupts
- Fully hardware validated and PCI-SIG certified
- Companion Windows and Linux DMA Drivers available
- Provided with a PCI Express Testbench
- Delivered fully integrated with target PCI Express core
- Minimal ASIC gate count
- Source code available
- Customization and Integration services available

Block Diagram

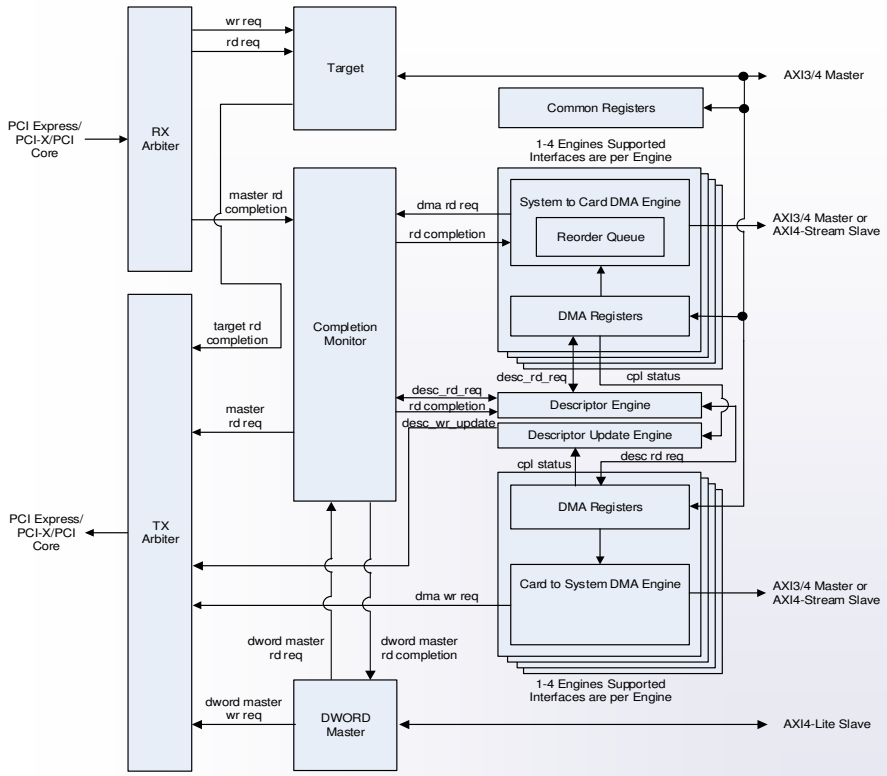

Product Overview

The Northwest Logic AXI DMA Back-End Core provides high-performance, scatter-gather DMA operation in a flexible fashion. This enables the core to be easily integrated and used in a wide variety of DMA-based systems.

Key features which contribute to this flexibility include:

- Works with Northwest Logic soft Expresso Cores and FPGA hard cores
- Can be configured with multiple independent DMA Engines which each have their own user interface
- Supports Packet/Block and Addressed/Non-addressed transfers
- Supports host –based and local descriptors
- Supports legacy, MSI, MSI-X interrupts

Using the core eliminates the need for the user to implement their own DMA design significantly reducing development time and risk.

In addition, Northwest Logic provides companion Windows and Linux DMA Drivers. The DMA Driver works hand-in-hand with the AXI DMA Back-End Core to implement host-based, scatter-gather DMA operation.

Northwest Logic also provides board support packages for a wide variety of Northwest Logic and third party PCI Express boards. This support packages including a working FPGA design, Driver and GUI binaries. Contact Northwest Logic for more information.

Northwest Logic also provides IP Core customization services. Contact Northwest Logic for a quote.

Product Deliverables:

- Core (Netlist or Source Code)
- Testbench (Source Code) with support for Aldec
- Complete Documentation
- Expert Technical Support & Maintenance Updates

Copyright © 2013 Northwest Logic

Northwest Logic Proprietary